R–1	GENERAL NOTES
R–2A	APPROVED MATERIALS AND PRODUCTS
R–2B	APPROVED MATERIALS AND PRODUCTS
R–3	TAPPING SLEEVE/SADDLE DETAIL
R–4	GATE VALVE AND BOX DETAIL
R–5	VALVE PAD DETAIL 2" THRU 12"
R–6	PERMANENT BLOW OFF DETAIL
R–7	TEMPORARY FLUSHING/BLOW OFF DETAIL
R–8	TEMPORARY BLOW OFF DETAIL
R–9	TYPICAL RESIDENTIAL DISTRIBUTION SYSTEM AND SERVICE LAYOUT
R–10	RECLAIMED WATER SERVICE CONNECTION DETAIL
R–11A	AIR RELEASE VALVE
R–11B	AIR RELEASE VALVE ASSEMBLY OFFSET
R–11C	AIR RELEASE VALVE MANUAL
R–12A	PIPE RESTRAINT SCHEDULE
R–12B	PIPE RESTRAINED SCHEDULE
R–12C	PIPE RESTRAINT SCHEDULE
R–13	RECLAIMED WATER WARNING SIGN

1. MAINTAIN SEPARATION BETWEEN UTILITIES IN ACCORDANCE WITH RULE 62-555.314 FAC.
2. IF REPAIRS TO NEW RECLAIMED WATER LINES ARE REQUIRED IN ORDER TO PASS A SPECIFIED PRESSURE TEST, THE NUMBER OF ALLOWED JOINT REPAIRS SHALL NOT EXCEED 10% OF THE TOTAL NUMBER OF JOINT CONNECTIONS. NEW LINES THAT FAIL TO PASS THE PRESSURE TEST AFTER THE 10% JOINT REPAIRS SHALL BE REPLACED AT THE CONTRACTOR'S EXPENSE.
3. ALL MAINS AND SERVICE PIPING SHALL BE HYDROSTATICALLY TESTED AT 150 PSI FOR A TWO HOUR PERIOD. NO INSTALLATION WILL BE ACCEPTED IF THE LEAKAGE IS GREATER THAN THAT ALLOWED BY AWWA C605, OR BY AWWA C600, WHICHEVER IS APPLICABLE, OR IF THERE IS ANY VISIBLE LEAK REGARDLESS OF AMOUNT.
4. A FIRE HYDRANT METER IS REQUIRED FOR ANY WATER USAGE IN A PROJECT. THE CITY WILL PROVIDE THE HYDRANT METER FOR A NON REFUNDABLE CHARGE OF $25.00 PLUS A $1,000.00 REFUNDABLE SECURITY DEPOSIT. BILLING FOR WATER CONSUMPTION SHALL BE ON A MONTHLY BASIS.
5. ONLY CITY EMPLOYEES ARE PERMITTED TO OPEN OR CLOSE ANY VALVES OWNED BY OR CONNECTED TO THE CITY RECLAIMED WATER SYSTEM.
6. THRUST BLOCKS ARE NOT ALLOWED. CITY APPROVED RESTRAINING DEVICES SHALL BE USED FOR PIPE RESTRAINT.
7. VALVES SHALL BE SPACED NO MORE THAN 1,000' APART IN COMMERCIAL AND HIGH-DENSITY AREAS, AND 2,000' APART IN OTHER AREAS ON DISTRIBUTION SYSTEMS. FOR TRANSMISSION MAINS VALVES SHALL BE SPACED A MAXIMUM OF 3,000'.
8. PROVIDE GATE VALVES AT ALL TEES AND CROSSINGS. A VALVE SHALL BE PROVIDED ON EACH BRANCH OF A CROSS OR TEE.
9. RECLAIMED WATER MAIN DEPTH SHALL BE A MINIMUM OF 36" BELOW FINAL GRADE.
10. WARNING TAPE SIZE 2" LABELED "RECLAIMED WATER LINE BELOW", SHALL BE PLACED 18" ABOVE ALL WATER MAINS, LATERALS AND HEADER TEES. NUMBER 10 GAUGE INSULATED COPPER CLAD TRACER WIRE SHALL BE ATTACHED TO TOPS OF NON-METALLIC PIPE WITH DUCT TAPE, AT PIPE BELLS AND AT LEAST FOUR ADDITIONAL EQUALLY SPACED POINTS ON EACH PIPE LENGTH. THE TRACER WIRE SHALL BE ATTACHED TO ALL LATERALS AND EXTENDED TO THE TOP OF EACH VALVE BOX ON THE INSIDE SO THAT PIPE LOCATOR CAN BE ATTACHED. DIRECTIONAL BORE TO HAVE 10 GAUGE COPPER CLAD DRILL WIRE ATACHED AT 3 SEPARATE LOCATIONS AROUND PIPE.
11. ALL SERVICE LATERALS SHALL BE A UNIFORM DISTANCE BETWEEN CURB AND SIDEWALK, AND SHALL BE LOCATED ON PROPERTY LOT LINE.
12. NO SPLICES IN SERVICE PIPING WILL BE ALLOWED BETWEEN THE RECLAIMED WATER MAIN AND THE CURB STOP.
13. ALL RECLAIMED WATER MAINS UNDER PAVEMENT SHALL BE DUCTILE IRON, EXCEPT DIRECTIONAL BORES, WHICH MAY BE SDR-11 HDPE.
14. A CONTINUITY TEST SHALL BE SUCCESSFULLY COMPLETED BY THE CONTRACTOR PRIOR TO FINAL ACCEPTANCE OF NON-METALLIC PIPES BY THE CITY.
15. RECLAIMED WATER LINES 8" AND GREATER IN DIAMETER SHALL BE CLEANED BY "PIGGING".
16. ALL FIELD CHANGES TO THE APPROVED DRAWINGS SHALL BE RECORDED AND ADDED TO THE RECORD DRAWING ("AS-BUILT") PLANS. UPON COMPLETION OF THE PROJECT, THE CONTRACTOR SHALL FURNISH RECORD DRAWINGS ON DISK USING AUTOCAD FILES AS WELL AS ON A SET OF REPRODUCIBLE DRAWINGS AND THREE BLUE-LINE COPIES.
17. RECORD DRAWINGS SHALL BE PREPARED BY A STATE OF FLORIDA LICENSED SURVEYOR AND THE BLUE LINE COPIES SHALL BE REVIEWED, SIGNED AND SEALED BY THE ENGINEER OF RECORD.
18. THE CONTRACTOR SHALL BE REQUIRED TO PROVIDE THE CITY WITH 48 HOURS NOTICE BEFORE COMMENCEMENT OF ANY CONSTRUCTION ACTIVITY.
19. THE CITY PUBLIC WORKS DIRECTOR MUST APPROVE ANY ITEM OR CHANGE NOT MENTIONED OR COVERED IN THE CITY STANDARD SPECIFICATIONS OR DETAILS.
20. ANY PROPOSED TAPS TO EXISTING CITY MAINS SHALL BE SCHEDULED AND COORDINATED WITH THE PUBLIC WORKS DIRECTOR. A MINIMUM 48 HOURS NOTICE MUST BE PROVIDED.
21. PVC PIPE FOR RECLAIMED WATER LINES SHALL BE PANTENE PURPLE. DIP SHALL HAVE PURPLE OR BE SPIRAL WRAPPED WITH PURPLE ADHESIVE TAPE. TUBING, METER BOXES AND VALVE BOX SHALL ALSO BE PURPLE.

MATERIAL	MANUFACTURER
PIPE	4–INCHES THRU 12–INCHES: PVC – AWWA C900–97, DR 26 DI – AWWA C151–02, PRESSURE CLASS 350 CEMENT MORTAR LINED 14–INCHES AND LARGER: PVC – AWWA C900, CAST–IRON–PIPE–EQUIPMENT OUTSIDE DIAMETER, PRESSURE RATING 165 PSI DI – AWWA C151–02, PRESSURE CLASS 150 OR GREATER, CEMENT MORTAR LINED
TUBING	AWWA C901–02, PE 4710, DR 9, PRESSURE CLASS 250 PSI ¾–INCH THRU 1½–INCH NOMINAL SIZE, WITH STAINLESS STEEL INSERTS, ENRON OR ENDOT Endopure
GATE VALVES	2–INCHES AND SMALLER: MUELLER A–2360–8, OR AMERICAN AVK, THREADED ENDS 4–INCHES AND LARGER: MECHANICAL JOINT ENDS, AWWA C509–01, MUELLER A–2360 OR AMERICAN AVK, OR AWWA C515–01, AMERICAN FLOW CONTROL SERIES 2500
BUTTERFLY VALVES	LARGER THAN 12" AWWA C504, RESILIENT SEATED MUELLER LINESEAL 111 M.J. KENNEDY BFV, FIG. 30
VALVE BOXES	TYLER 461–S 18" – 24" TYLER 562–S 24" – 36"
CHECK VALVE	CAST IRON, RESILIENT SEAT, AWWA C508 AMERICAN FLOW 50SC MUELLER MA–2602–6–01–LW
FITTINGS	4–INCHES AND LARGER: AWWA C153–00 OR C110–03, MECHANICAL JOINT TYPE, CEMENT–MORTAR LINED
RESTRAINING DEVICES	PVC PIPE EBAA IRON MEGA–LUG 2000PV, 1600, 2800 FORD UNIFLANGE 1500, 1300, 1350, 1390 DUCTILE IRON EBAA IRON MEGA–LUG 1100, 1700, 1100SD FORD UNIFLANGE 1400
2" AIR RELEASE VALVE	A.R.I. FLOW CONTROL–D–04055 VENT–O–MAT MODEL RBX
TAPPING VALVE	MUELLER T–2360 AMERICAN FLOW CONTROL SERIES 2500

CITY OF GROVELAND STANDARD DETAILS: RECLAIMED WATER

CITY OF GROVELAND ESTABLISHED 1922

APPROVED MATERIALS AND PRODUCTS

REVISED AUGUST 13, 2018
SCALE: N.T.S.

R–2A

MATERIAL	MANUFACTURER
TAPPING SLEEVE	AWWA C223–02, TYPE 304 STAINLESS STEEL PER ASTM A240 WITH OUTLET FLANGE PER MSS SP–60; STAINLESS STEEL BOLTING WITH ANTISEIZE COMPOUND. ROMAC SST, FORD FAST, OR JCM 432, MUELLER H–304. TPS TRIPLE TAP MUST BE USED FOR SIZE ON SIZE AND TAPS ON HDPE
SERVICE SADDLES	OUTLET TAPPED WITH I.P. THREAD (F.I.P.T.), TPS MODEL T3 OR APPROVED EQUAL MUST BE USED FOR ALL ARV TAPS AND TAPS ON HDPE.
CORPORATION STOP	AWWA C800, INLET WITH MALE IRON PIPE THREAD, OUTLET FOR CONNECTION TO COPPER TUBE SIZE O.D. POLYETHYLENE TUBING; MUELLER H–15028 OR FORD F1100–4, 1–INCH SIZE FOR SINGLE SERVICE; MUELLER H–15023 OR FORD FB1100–6, 1½–INCH SIZE FOR DOUBLE SERVICE
CURB STOP (METER VALVE)	FOR SINGLE SERVICE: 1–INCH INLET FOR COPPER TUBE SIZE POLYETHYLENE TUBING BY METER SWIVEL NUT OUTLET FOR EITHER ⅝ X ¾–INCH OR ¾–INCH METER; MUELLER B–24258 OR B–24350 OR FORD B43–342W OR KV43–342W U BRANCH FOR DOUBLE SERVICE: 1½–INCH INLET FOR COPPER TUBE SIZE POLYETHYLENE TUBING WITH ¾–INCH MALE IRON PIPE THREAD OUTLETS; MUELLER H–1536311234712 WITH B–24265 ANGLE METER VALVES HAVING ¾–INCH FEMALE IRON PIPE INLET AND METER SWIVEL NUT OUTLETS OR FORD UV43–62W
SINGLE METER BOX	DFW PLASTICS DFW37F5–12–5C BOX, 21" X 14" X 12" PURPLE POLYMER FLARED BOX W/ PURPLE POLYMER LID W/SINGLE TOUCH READ HOLE GLASMASTERS 11" X 18" X 12" BOX W/ SOLID PURPLE COVER W/ 1 AMR HOLE
DOUBLE METER BOX	DFW PLASTICS DFW39F5–12–5C, 19" X 18" X 12" PURPLE POLYMER FLARED BOX W/ PURPLE POLYMER LID W/ DUAL TOUCH READ HOLES GLASMASTERS 15" X 17" X 12" BOX W/ SOLID PURPLE COVER W/ 2 AMR HOLES

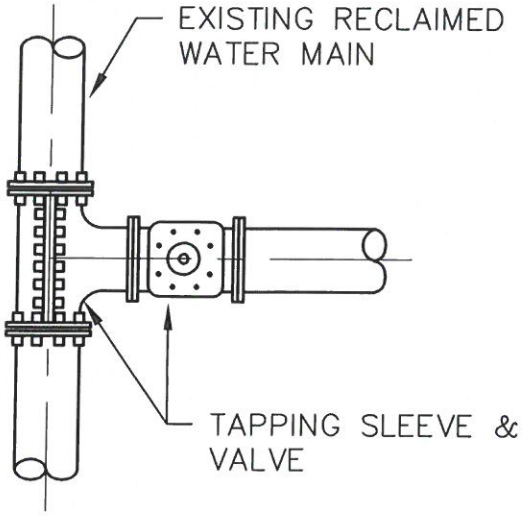

PLAN

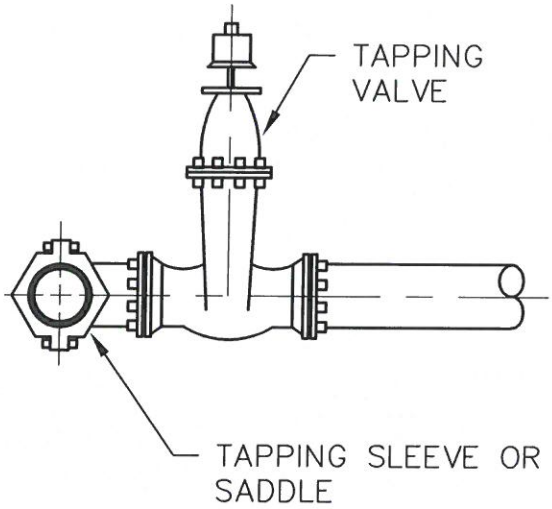

SIDE VIEW

NOTES:

1. TAPPING SLEEVE TO BE STAINLESS STEEL FOR 12" PIPE OR SMALLER, WITH PUBLIC WORKS DIRECTOR'S WRITTEN APPROVAL.
2. TAPPING SLEEVE OR SADDLE IS TO BE COMPLETELY WRAPPED WITH 8 MIL POLYETHYLENE ENCASEMENT.
3. TAPPING SLEEVE AND SADDLE SHALL BE TESTED AT A MINIMUM OF 150 PSI FOR A MINIMUM OF 15 MINUTES WITH NO VISIBLE LEAKAGE.
4. SIZE ON SIZE TAPS SHALL REQUIRE FULLY ENCAPSULATED SPLIT TAPPING SLEEVES, WITH MECHANICAL JOINT FLANGED.

CITY OF GROVELAND STANDARD DETAILS: RECLAIMED WATER

CITY OF GROVELAND ESTABLISHED 1922

METZGER & WILLARD, INC.
Civil • Environmental Engineers • Surveyors
8600 Hidden River Parkway, Suite 550
Tampa, Florida 33637 (813) 977-6005

TAPPING SLEEVE/SADDLE DETAIL

DATE: JULY 7, 2008
SCALE: N.T.S.

R-3

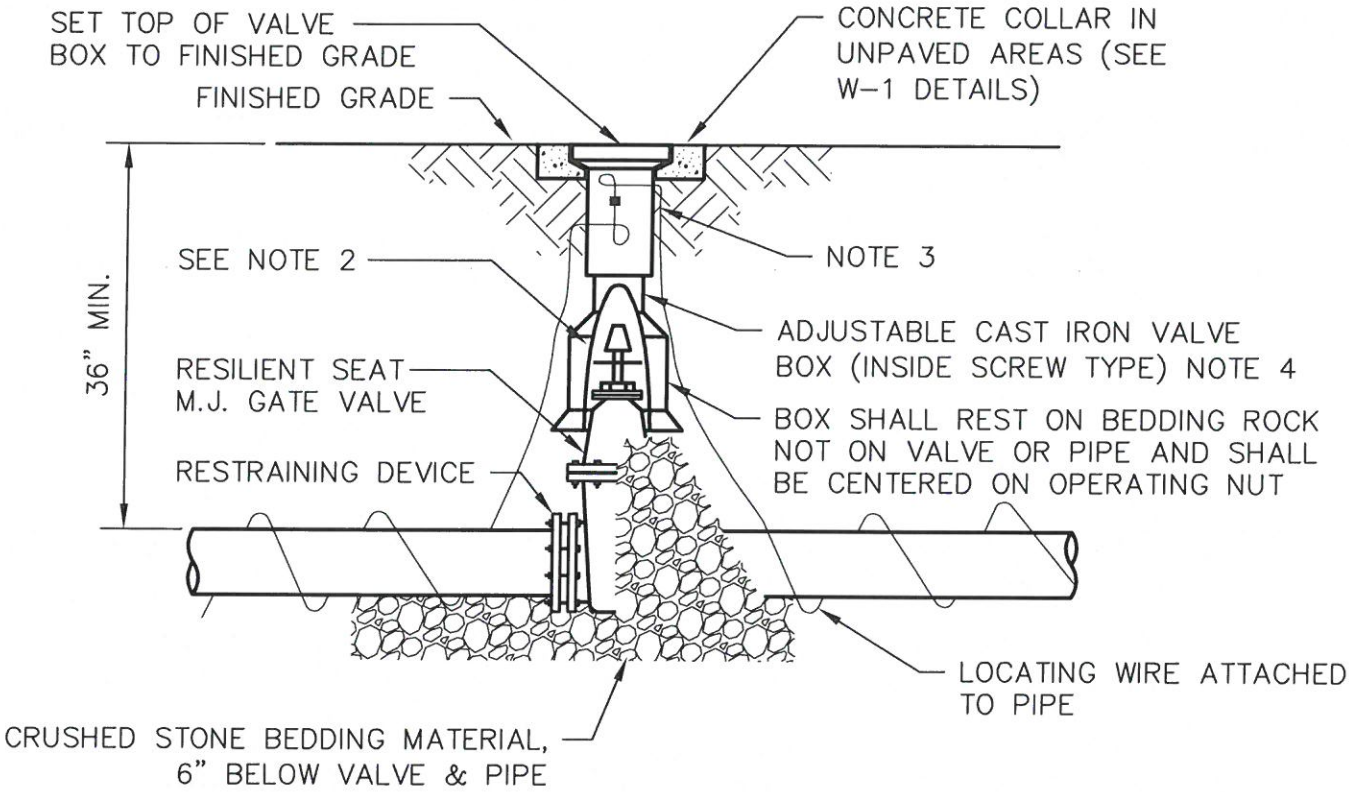

NOTES:

1. PVC EXTENSIONS SHALL NOT BE USED ON VALVE BOX INSTALLATION.
2. THE ACTUATING NUT FOR DEEPER VALVES SHALL BE EXTENDED TO A MAXIMUM OF 30 INCHES BELOW FINISHED GRADE.
3. LOCATING WIRE TO ENTER VALVE BOX THRU 3/4 INCH HOLE. PROVIDE 12 INCH PIGTAILS AND CONNECT WITH WIRE NUT.
4. ADJUST TO MID-RANGE TO ALLOW FOR FUTURE BOX ADJUSTMENTS.
5. PROVIDE POTTING COMPOUND AT ALL TRACER WIRE JUNCTIONS AND SPLICES.
6. EXTEND TRACER WIRE INTO METER BOXES TO CURB STOP.

CITY OF GROVELAND STANDARD DETAILS: RECLAIMED WATER

CITY OF GROVELAND ESTABLISHED 1922

METZGER & WILLARD, INC.
Civil • Environmental Engineers • Surveyors
8600 Hidden River Parkway, Suite 550
Tampa, Florida 33637 (813) 977-6005

GATE VALVE AND BOX DETAIL

DATE: JULY 7, 2008
SCALE: N.T.S.

R-4

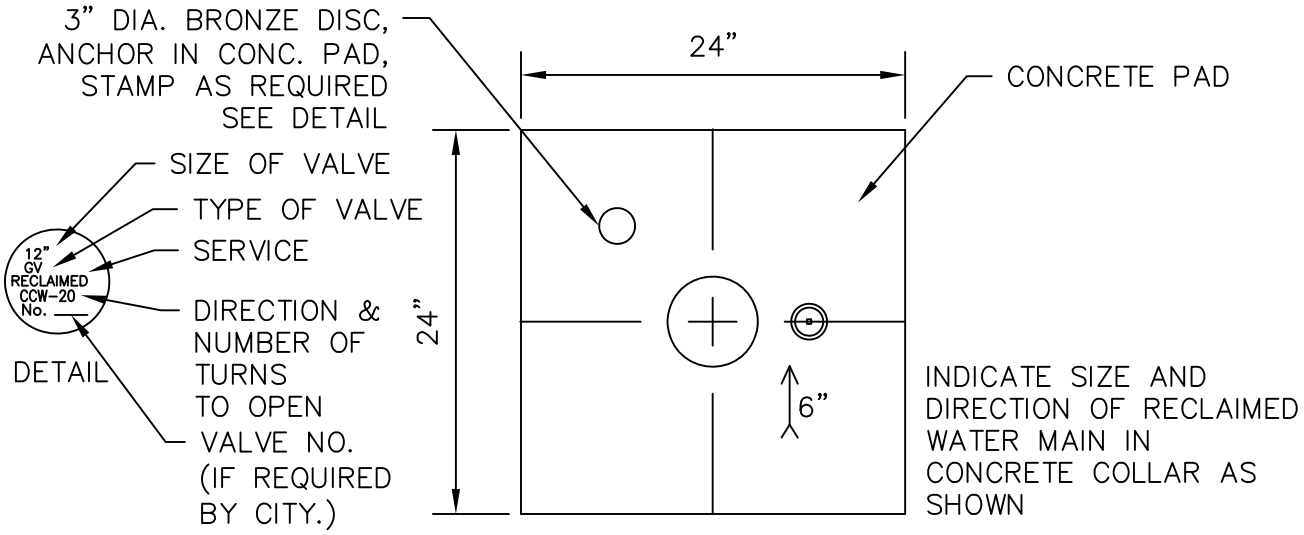

PLAN

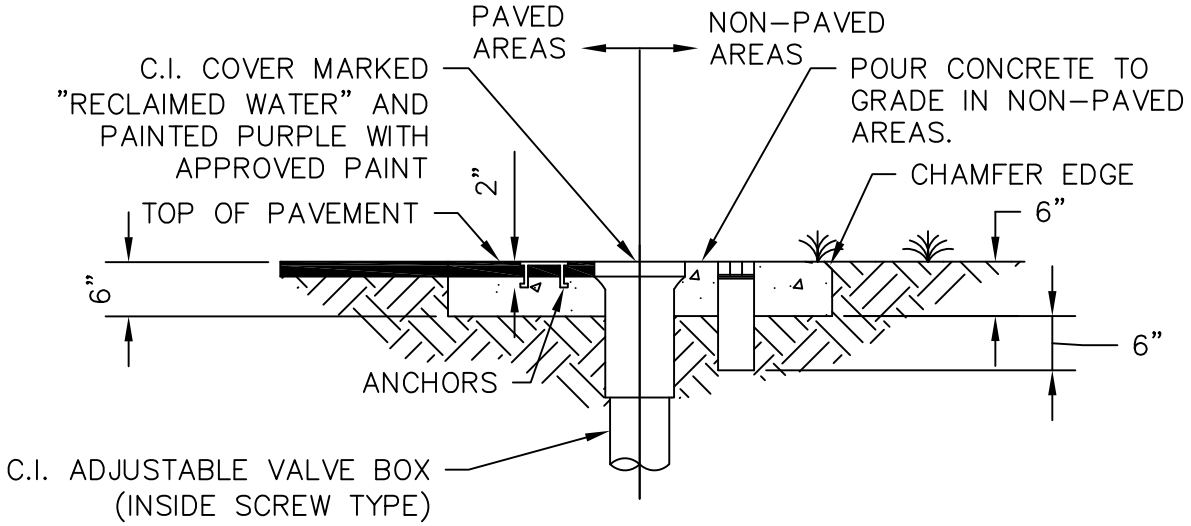

SECTION

CITY OF GROVELAND STANDARD DETAILS: RECLAIMED WATER

VALVE PAD DETAIL
2" THRU 12"

REVISED AUGUST 13, 2018
SCALE: N.T.S.

R-5

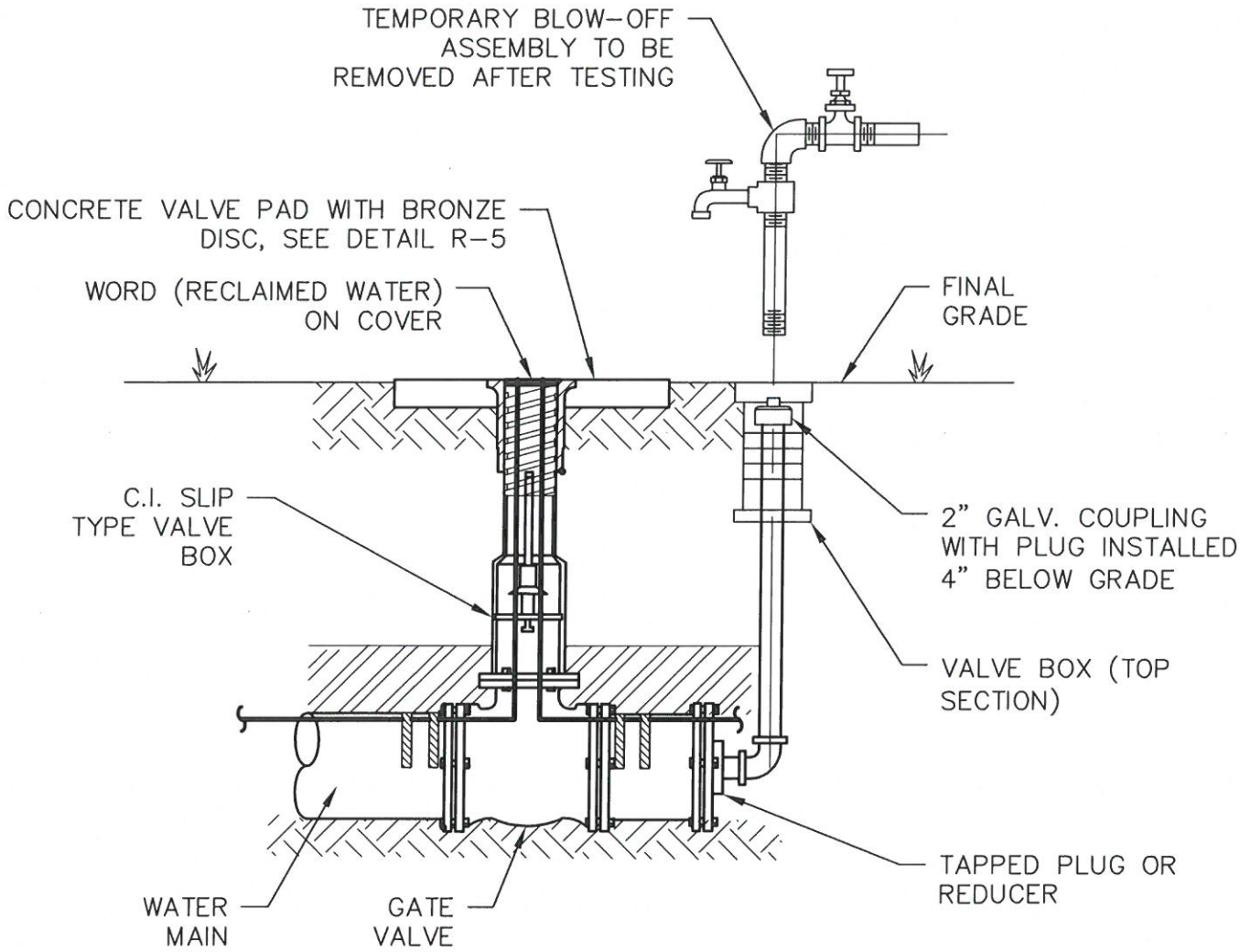

FOR EITHER PAVED OR NON-PAVED AREAS

NOTES:

1. MECHANICAL JOINTS/UNDERGROUND PIPING SHALL BE RESTRAINED AS SPECIFIED IN JOINT RESTRAINT TABLE.
2. OPERATING NUT SHALL BE WITHIN 12" OF GRADE. EXTENSION TO BE PROVIDED AS REQUIRED.
3. VALVE EXTENSION SHALL BE MECHANICALLY ATTACHED AND SHALL HAVE A STAINLESS STEEL PIN AT THE VALVE AND SHEAR PIN ONLY AT THE OPERATING NUT.

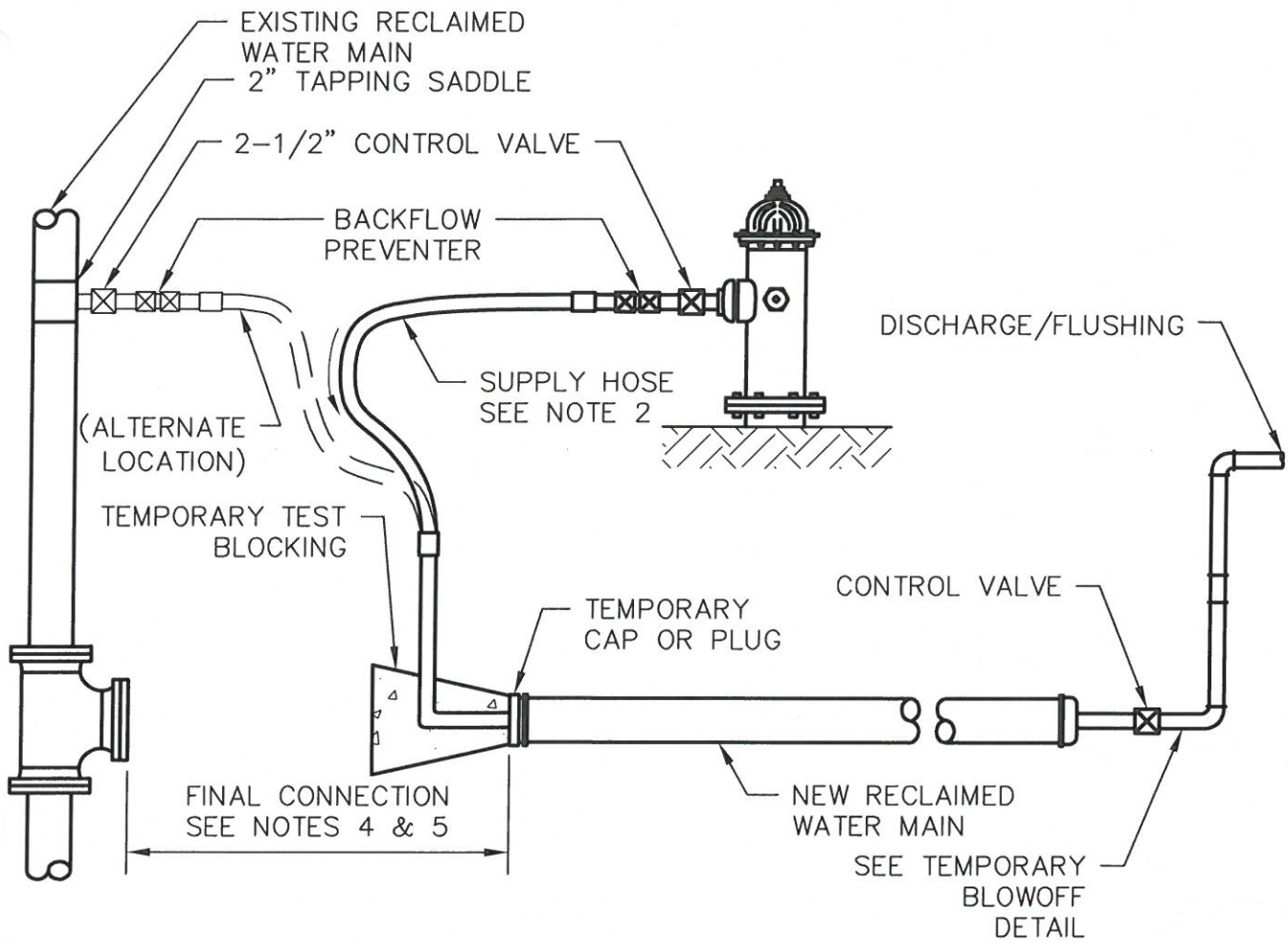

NOTES:

1. REFERENCE, AWWA C651. FIG.1
2. THIS HOSE MUST BE REMOVED DURING THE HYDROSTATIC PRESSURE TEST.
3. THIS DETAIL APPLIES TO PIPES WITH DIAMETERS 4" THROUGH 12". ALL LARGER SIZES MUST BE HANDLED ON A CASE BY CASE BASIS.
4. PIPE FOR FINAL CONNECTION SHALL BE THOROUGHLY CLEANED OF SAND AND DEBRIS PRIOR TO CONNECTION.
5. LENGTH OF FINAL CONNECTION SHALL BE MINIMIZED. CONNECTION SHALL BE VISIBLY INSPECTED UNDER LINE PRESSURE PRIOR TO BACKFILLING.

CITY OF GROVELAND STANDARD DETAILS: RECLAIMED WATER

CITY OF GROVELAND ESTABLISHED 1922

METZGER & WILLARD, INC.
Civil • Environmental Engineers • Surveyors
8600 Hidden River Parkway, Suite 550
Tampa, Florida 33637 (813) 977-6005

TEMPORARY FLUSHING/BLOW OFF DETAILS

DATE: JULY 7, 2008
SCALE: N.T.S.

R-7

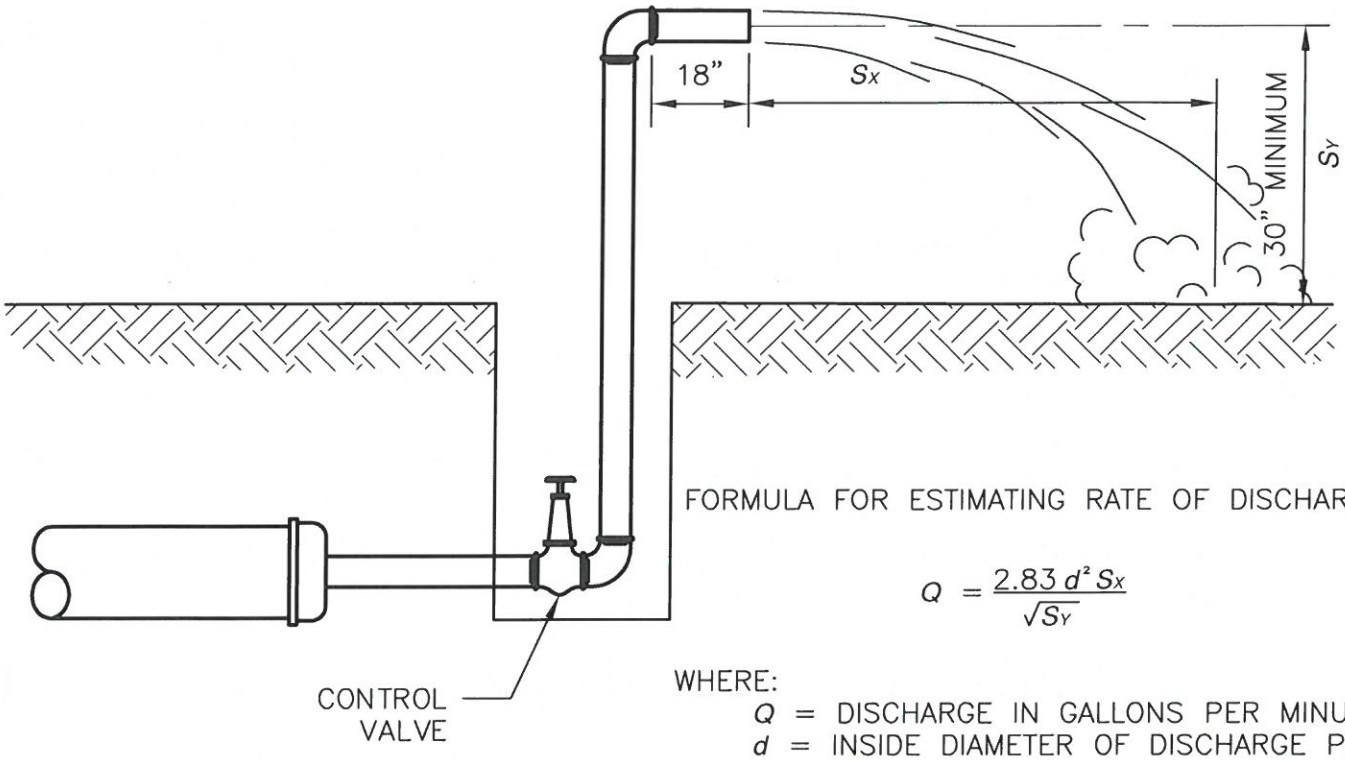

FORMULA FOR ESTIMATING RATE OF DISCHARGE

$$Q = \frac{2.83\, d^2\, S_X}{\sqrt{S_Y}}$$

WHERE:

Q = DISCHARGE IN GALLONS PER MINUTE
d = INSIDE DIAMETER OF DISCHARGE PIPE
d, Sx, Sy = MEASURED IN INCHES

NOTES:

1. REFERENCE, AWWA C651. FIG.2
2. THIS DETAIL APPLIES TO PIPES UP TO AND INCLUDING 8" DIAMETER. LARGER SIZES SHALL BE HANDLED ON A CASE BY CASE BASIS.

CITY OF GROVELAND STANDARD DETAILS: RECLAIMED WATER

CITY OF GROVELAND ESTABLISHED 1922

METZGER & WILLARD, INC.
Civil • Environmental Engineers • Surveyors
8600 Hidden River Parkway, Suite 550
Tampa, Florida 33637 (813) 977-6005

TEMPORARY BLOWOFF DETAIL

DATE: JULY 7, 2008
SCALE: N.T.S.

R-8

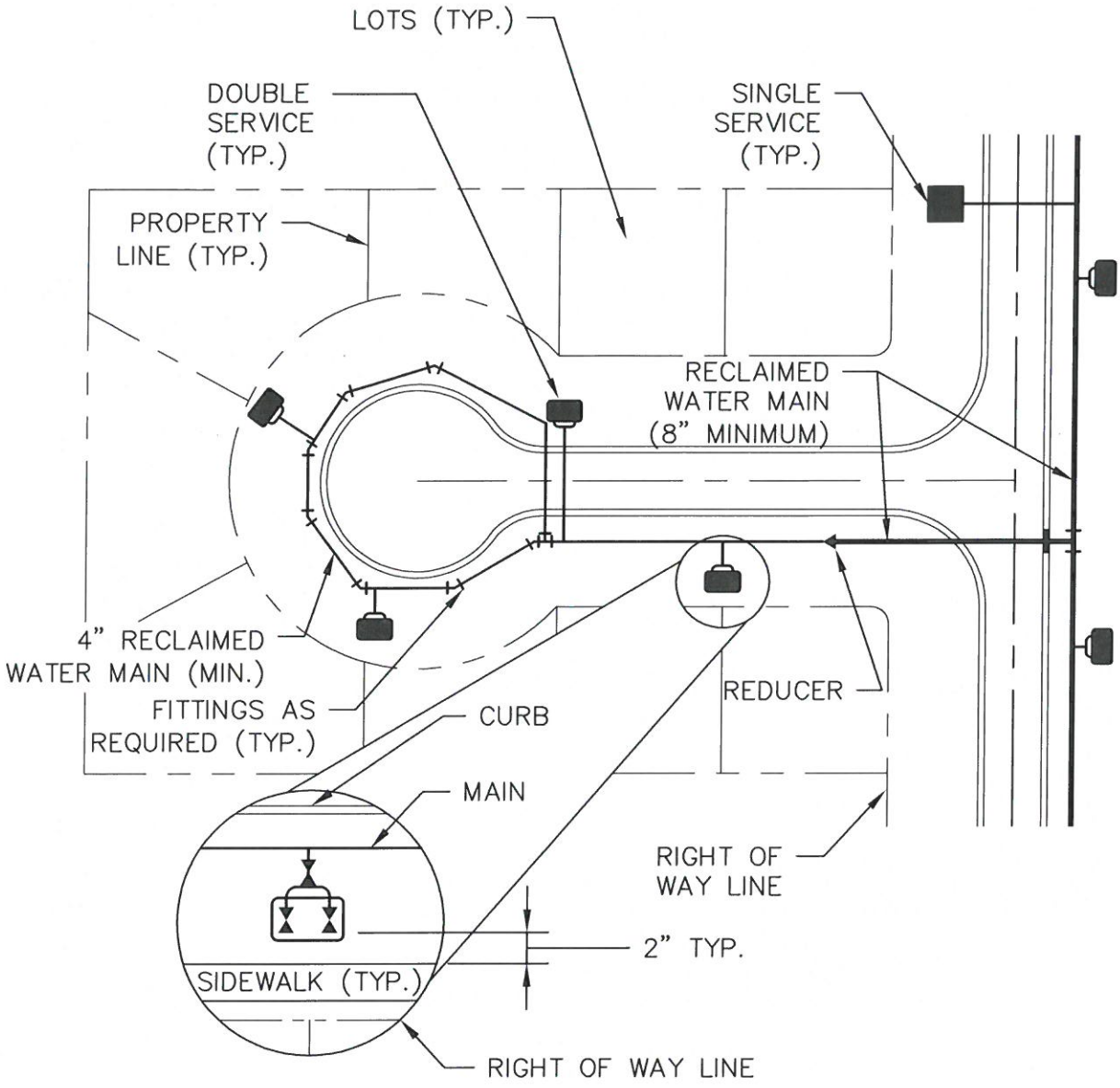

NOTES:

1. RECLAIMED WATER LINES TO BE LOCATED ON OPPOSITE SIDE OF STREET FROM POTABLE WATER MAIN.
2. ALL SERVICES BE LOCATED ON OPPOSITE LOT LINES FROM POTABLE WATER SERVICE.

CITY OF GROVELAND STANDARD DETAILS: RECLAIMED WATER

CITY OF GROVELAND ESTABLISHED 1922

METZGER & WILLARD, INC.
Civil • Environmental Engineers • Surveyors
8600 Hidden River Parkway, Suite 550
Tampa, Florida 33637 (813) 977-6005

TYPICAL RESIDENTIAL DISTRIBUTION SYSTEM AND SERVICE LAYOUT

DATE: JULY 7, 2008
SCALE: N.T.S.

R-9

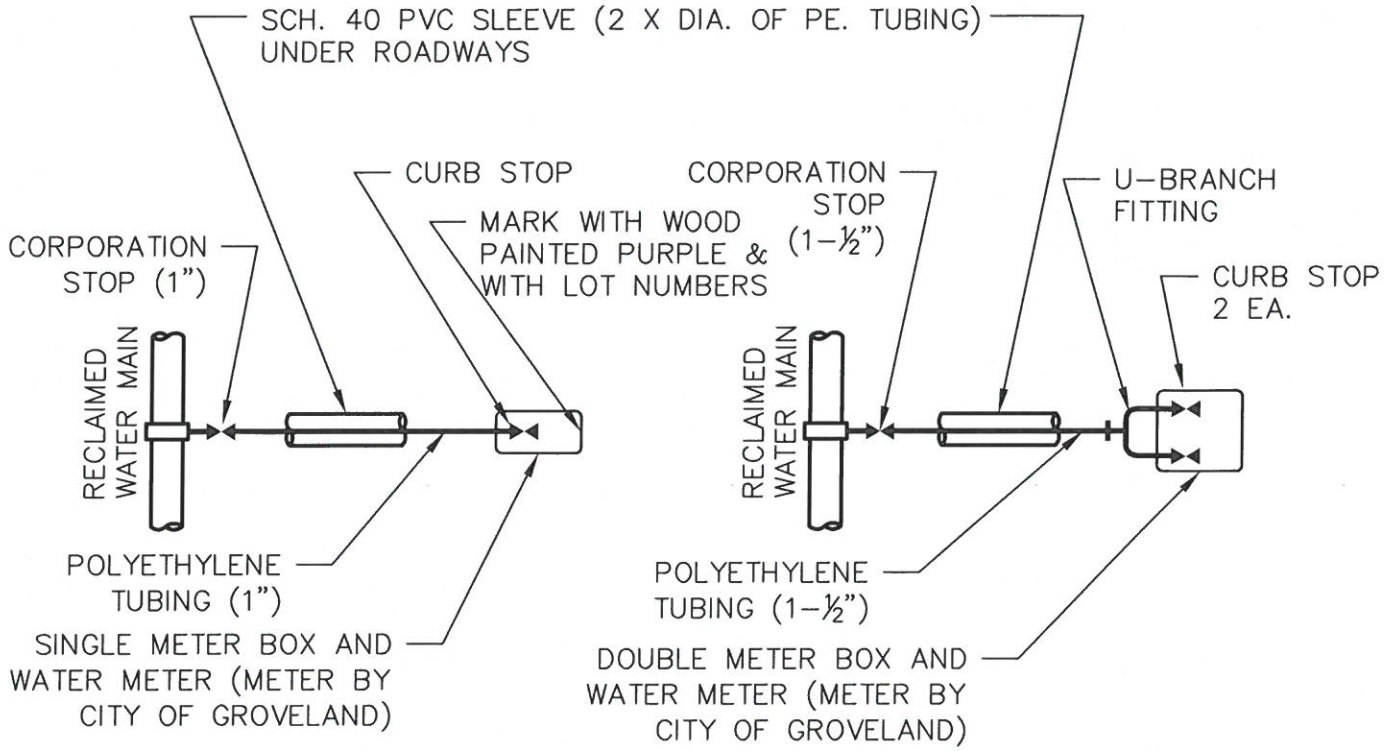

SINGLE SERVICE

DOUBLE SERVICE

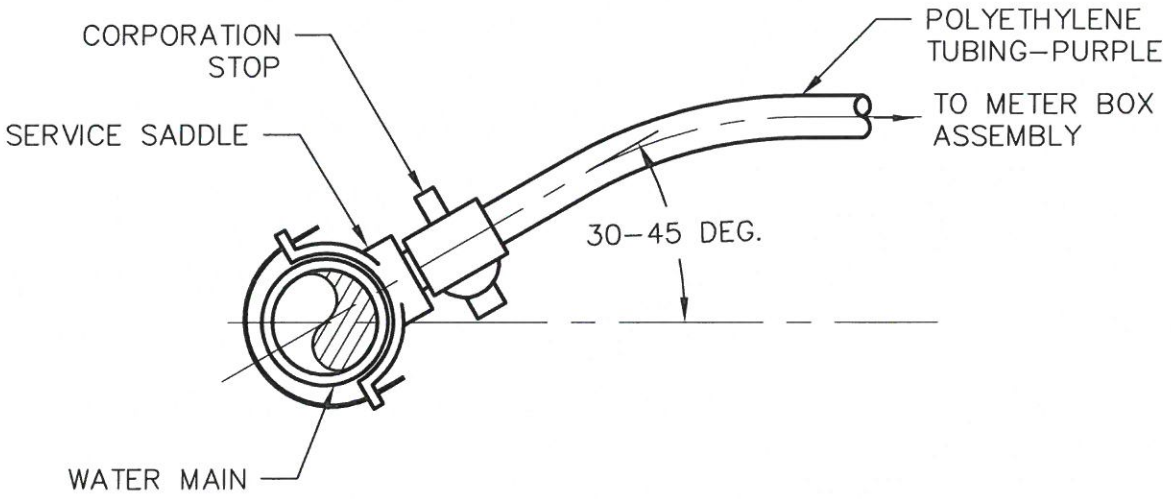

NOTES:

1. EXTEND TRACING WIRE INTO METER BOXES TO CURB STOP AND ATTACH TO PIPING FOR DOUBLE SERVICES, CONNECT TO ONE CURB STOP ONLY.

CITY OF GROVELAND STANDARD DETAILS: RECLAIMED WATER

CITY OF GROVELAND ESTABLISHED 1922

METZGER & WILLARD, INC.
Civil • Environmental Engineers • Surveyors
8600 Hidden River Parkway, Suite 550
Tampa, Florida 33637 (813) 977-6005

RECLAIMED WATER SERVICE CONNECTION DETAIL

DATE: JULY 7, 2008
SCALE: N.T.S.

R-10

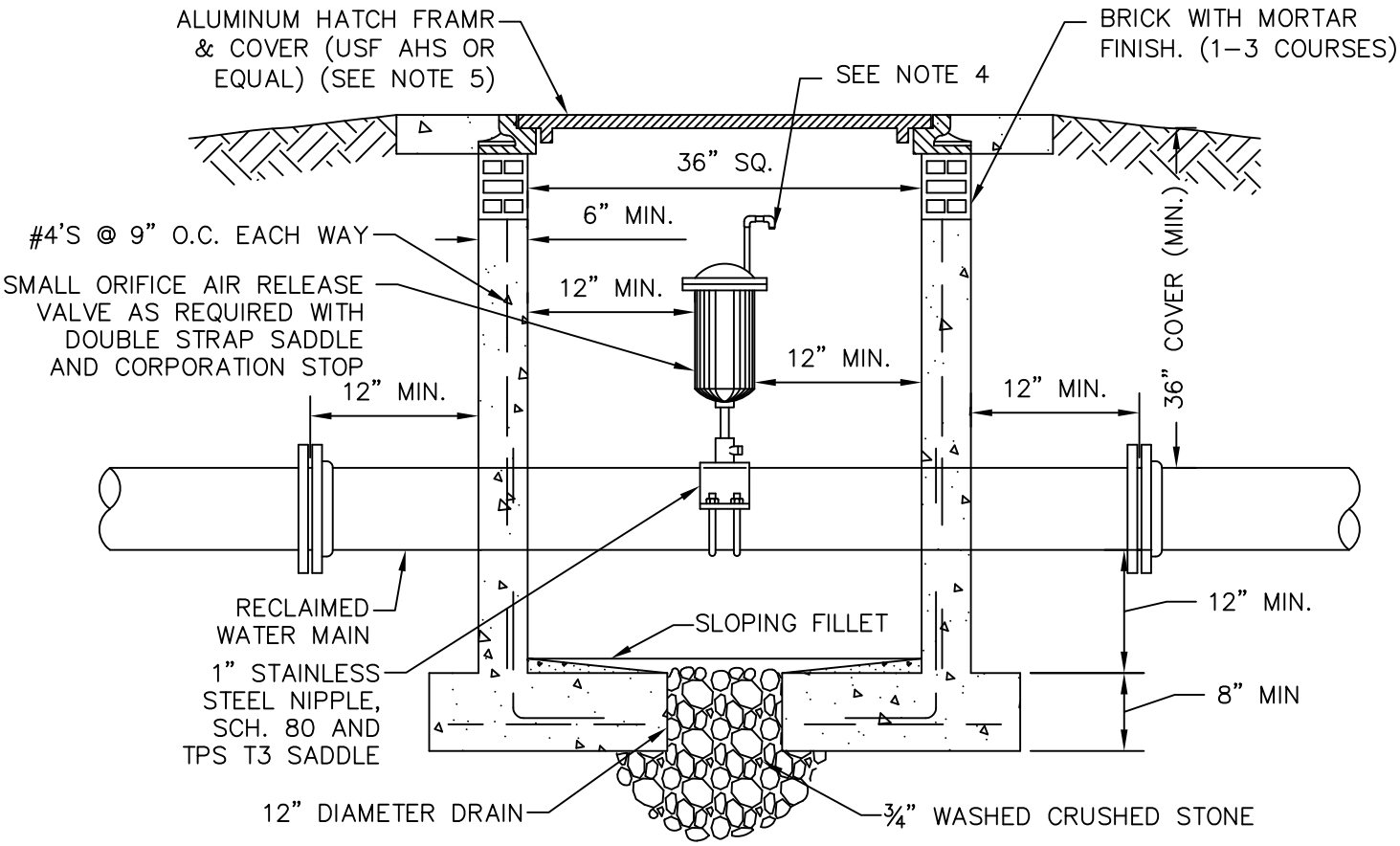

NOTES:

1. ALL OPENINGS SHALL BE SEALED WITH WATERPROOF NON–SHRINKING GROUT.
2. VAULT SHALL BE PRECAST OR CAST IN PLACE CONCRETE WITH STEEL REINFORCING AND 4000 P.S.I. CONCRETE.
3. ½" STAINLESS STEEL NIPPLES AND ELLS.
4. ELBOW OF DOWN FACING SCREEN ON OUTLET 20–MESH ST. STL.
5. WITHIN PAVEMENT AND SHOULDER AREAS, FRAME AND COVER SHALL BE TRAFFIC BEARING.

CITY OF GROVELAND STANDARD DETAILS: RECLAIMED WATER

CITY OF GROVELAND ESTABLISHED 1922	AIR RELEASE VALVE	REVISED AUGUST 13, 2018 SCALE: N.T.S. R–11A

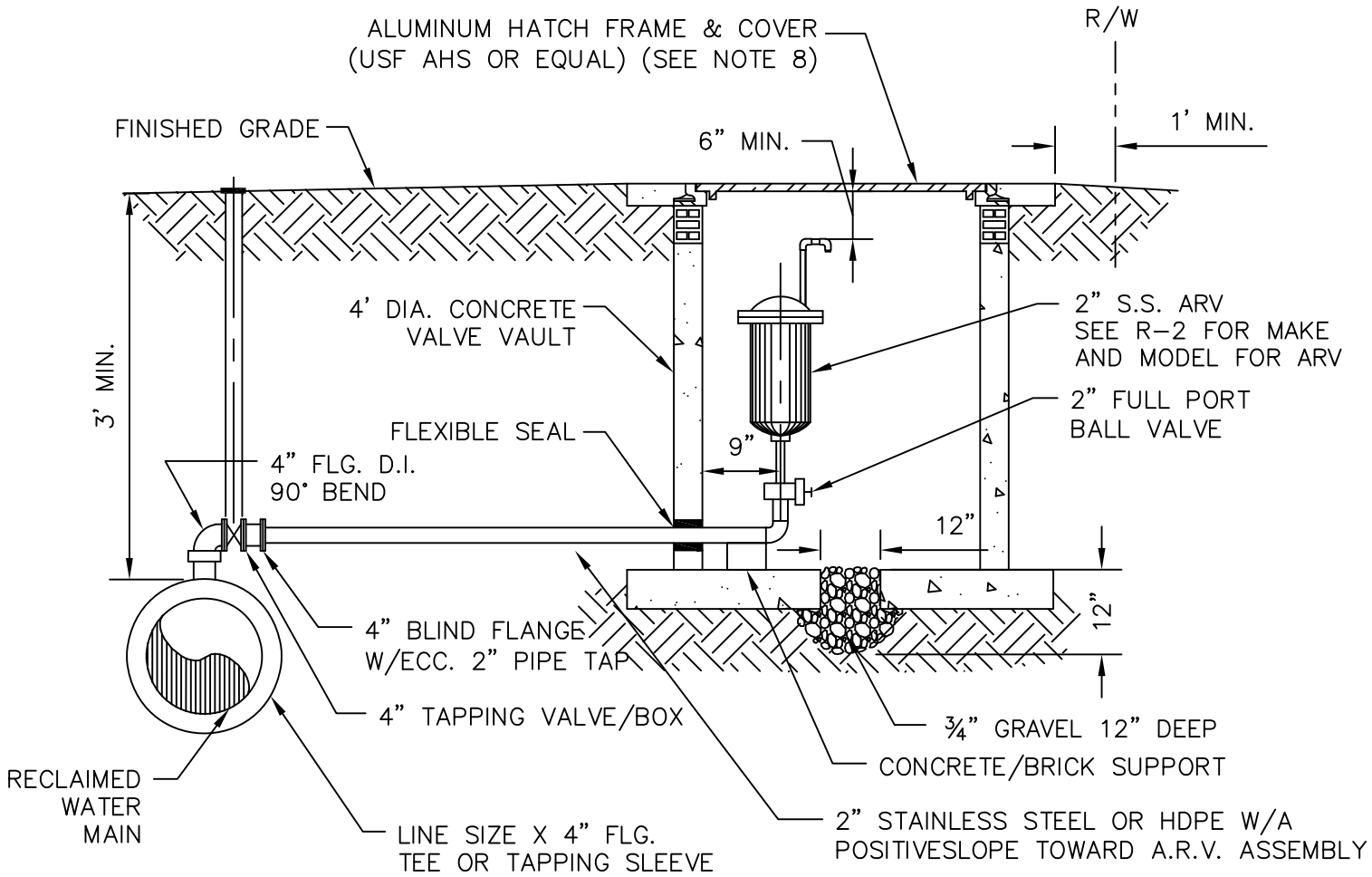

NOTES:

1. ALL OPENINGS SHALL BE SEALED WITH WATERPROOF NON-SHRINKING GROUT.
2. VAULT SHALL BE PRECAST OR CAST IN PLACE CONCRETE ALL WITH STEEL REINFORCING AND 4000 P.S.I.., CONCRETE.
3. ½" STAINLESS STEEL NIPPLES AND ELLS.
4. ½" PIPE AND FITTINGS MATERIALS TO BE PVC ABOVE GRADE AND STAINLESS STEEL BELOW GRADE. PAINT SAFETY YELLOW.
5. ELBOW, DOWN FACING WITH SCREEN ON OUTLET (20-MESH ST. STL.).
6. ADJUST VERTICAL ALIGMENT OF PROPOSED WATER MAIN SO THAT HIGH POINT IS MINIMUM 3' BELOW FINISHED GRADE.
7. MINIMUM DEPTH OF PIPE SHALL BE INCREASED AS NECESSARY TO ENSURE VALVE VAULT IS FLUSH WITH GRADE AS SHOWN.
8. WITHIN PAVEMENT AND SHOULDER AREAS, FRAME AND COVER SHALL BE TRAFFIC BEARING.

CITY OF GROVELAND STANDARD DETAILS: RECLAIMED WATER

CITY OF GROVELAND ESTABLISHED 1922	AIR RELEASE VALVE ASSEMBLY-OFFSET	REVISED AUGUST 13, 2018 SCALE: N.T.S. R-11B

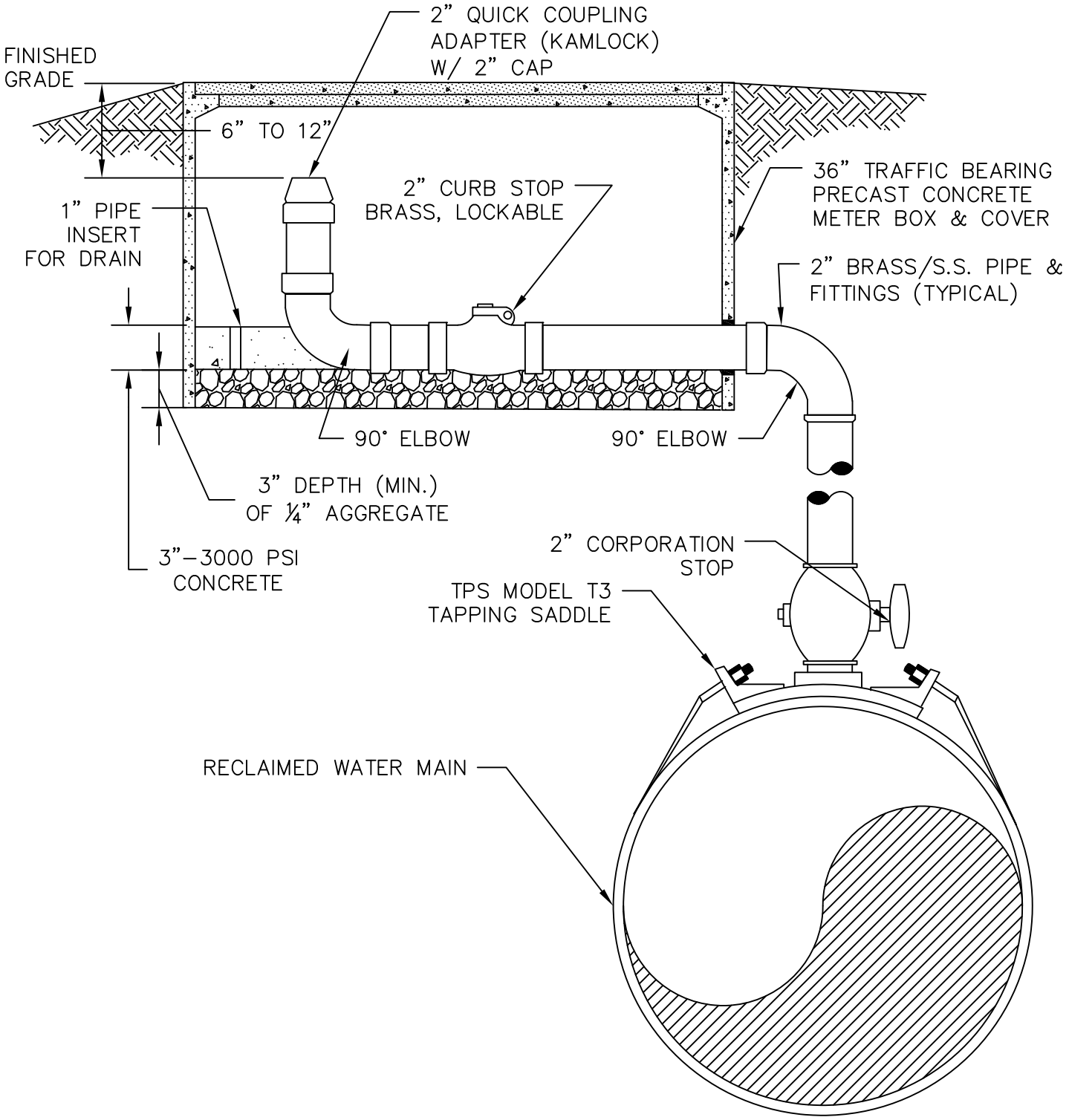

CITY OF GROVELAND STANDARD DETAILS: RECLAIMED WATER

CITY OF GROVELAND ESTABLISHED 1922	AIR RELEASE VALVE–MANUAL	REVISED AUGUST 13, 2018 SCALE: N.T.S. R–11C

MINIMUM LENGTH OF PIPE (IN FEET) REQUIRED TO BE RESTRAINED ON EACH SIDE OF A VALVE OR FITTING FOR SANDY SOILS (SW, SP, SM, SC)

PIPE TYPE	PIPE SIZE	90° BEND	45° BEND	≤22.5° BEND	TEE OR CROSS	VERTICAL OFFSET[a]		REDUCER[b]	VALVE	DEAD END
						LOW	HIGH			
PVC PIPE	≤4	18	18	18	18	18	22	36	18	52
	6	24	18	18	18	18	30	38	36	73
	8	31	18	18	18	18	40	69	36	96
	10	37	18	18	18	18	48	93	54	115
	12	43	18	18	18	18	56	99	54	136
	14	49	20	18	18	18	64	101	72	155
	16	55	23	18	18	18	72	103	72	174
	18	60	25	18	36	20	80	104	72	192
	20	65	27	18	36	21	87	105	72	211
	24	75	31	18	36	25	102	134	90	246
	30	88	37	18	36	29	122	185	90	295

PIPE TYPE	PIPE SIZE	90° BEND	45° BEND	≤22.5° BEND	TEE OR CROSS	VERTICAL OFFSET[a]		REDUCER[b]	VALVE	DEAD END
						LOW	HIGH			
DUCTILE IRON	≤4	18	18	18	18	18	18	18	18	33
	6	20	18	18	18	18	19	35	36	47
	8	26	18	18	18	18	25	44	36	61
	10	31	18	18	18	18	30	60	54	73
	12	37	18	18	18	18	36	63	54	86
	14	41	18	18	18	18	41	64	72	98
	16	46	19	18	36	18	46	66	72	111
	18	51	21	18	36	18	51	66	72	122
	20	56	23	18	36	18	56	67	72	134
	24	64	27	18	36	21	65	85	90	156
	30	75	31	18	36	25	78	118	90	188

MINIMUM LENGTH OF PIPE (IN FEET) REQUIRED TO BE RESTRAINED ON EACH SIDE OF A VALVE OR FITTING FOR CLAYEY AND SILTY SOILS (CL, CH, ML, MH)

PIPE TYPE	PIPE SIZE	90° BEND	45° BEND	≤22.5° BEND	TEE OR CROSS	VERTICAL OFFSET[a]		REDUCER[b]	VALVE	DEAD END
						LOW	HIGH			
PVC PIPE	≤4	19	18	18	18	18	23	36	18	55
	6	26	18	18	18	18	32	40	36	77
	8	35	18	18	18	18	42	73	36	101
	10	42	18	18	18	18	50	98	54	121
	12	50	21	18	18	18	59	104	54	143
	14	57	23	18	36	20	67	106	72	163
	16	64	27	18	36	23	76	109	72	183
	18	71	29	18	36	25	84	109	72	202
	20	78	32	18	36	28	92	110	72	221
	24	92	38	18	36	33	107	140	90	258
	30	110	46	22	54	40	127	193	90	308

PIPE TYPE	PIPE SIZE	90° BEND	45° BEND	≤22.5° BEND	TEE OR CROSS	VERTICAL OFFSET[a]		REDUCER[b]	VALVE	DEAD END
						LOW	HIGH			
DUCTILE IRON	≤4	18	18	18	18	18	18	18	18	35
	6	22	18	18	18	18	20	25	36	49
	8	29	18	18	18	18	27	46	36	64
	10	35	18	18	18	18	32	62	54	77
	12	41	18	18	18	18	37	66	54	90
	14	47	20	18	18	18	43	67	72	103
	16	53	22	18	36	19	48	68	72	115
	18	59	24	18	36	21	53	69	72	127
	20	65	27	18	36	23	58	70	72	140
	24	76	31	18	36	27	67	89	90	162
	30	91	38	18	36	32	80	122	90	194

PIPE THRUST RESTRAINTS: MECHANICAL RESTRAINERS SHALL BE INSTALLED AS REQUIRED TO PROPERLY RESTRAIN ALL PIPING SYSTEMS. AT A MINIMUM, RESTRAINERS SHALL BE PROVIDED ON ALL BELOW-GRADE VALVES AND FITTINGS AND AT THE REQUIRED NUMBER OF PIPE JOINTS IN EACH DIRECTION. REQUIRED LENGTHS OF RESTRAINED PIPE SHALL BE AS SHOWN IN PIPE RESTRAINT SCHEDULES BELOW.

BASIS OF SCHEDULES

1. TEST PRESSURE 150 PSIG
2. MINIMUM PIPE DEPTH 3 FEET
3. TYPE 3 LAYING CONDITION
4. FACTOR OF SAFETY = 2.0

A "LOW" REPRESENTS THE MINIMUM LENGTH OF PIPE (IN FEET) REQUIRED TO BE RESTRAINED ON THE LOW SIDE OF THE VERTICAL OFFSET, WHICH IS TYPICALLY DOWNSTREAM OF THE OFFSET FITTING. "HIGH" REPRESENTS THE MINIMUM LENGTH OF PIPE (IN FEET) REQUIRED TO BE RESTRAINED ON THE HIGH SIDE OF THE VERTICAL OFFSET, WHICH IS TYPICALLY UPSTREAM OF THE OFFSET FITTING. REQUIRED RESTRAINED LENGTHS ASSUME AN OFFSET ANGLE # 45E.

B DISTANCE REPRESENTS THE LINEAR FEET OF LARGE DIAMETER PIPE UPSTREAM OF THE REDUCER REQUIRED TO BE RESTRAINED. RESTRAIN SMALL DIAMETER PIPE AT REDUCER AT A MINIMUM. IF THERE IS AN UNOBSTRUCTED RUN DOWNSTREAM OF THE REDUCER (I.E. SMALL DIAMETER PIPE) OF AT LEAST 2.5 TIMES THE REQUIRED LENGTH OF LARGE DIAMETER PIPE TO BE RESTRAINED, THEN RESTRAINT IS REQUIRED ONLY AT THE REDUCER FITTING. IF SMALL END OF REDUCER IS MORE THAN THREE PIPE SIZES SMALLER THAN LARGE END, CONSULT ENGINEER FOR REQUIRED LENGTH TO BE RESTRAINED.

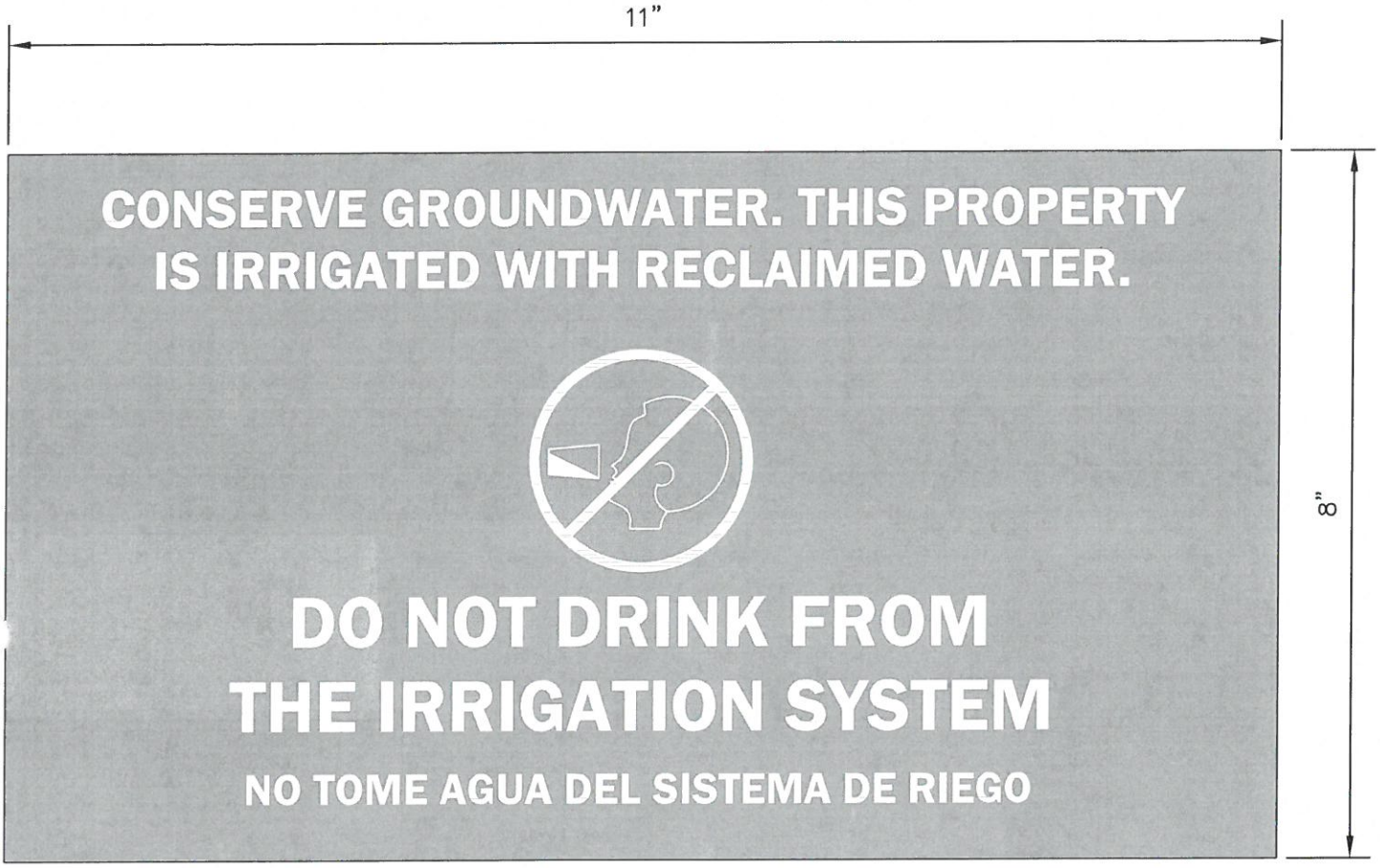

MINIMUM DIMENSIONS: 8"x11"
COLOR: PURPLE

CITY OF GROVELAND STANDARD DETAILS: RECLAIMED WATER

CITY OF GROVELAND ESTABLISHED 1922

METZGER & WILLARD, INC.
Civil • Environmental Engineers • Surveyors
8600 Hidden River Parkway, Suite 550
Tampa, Florida 33637 (813) 977-6005

RECLAIMED WATER WARNING SIGN

DATE: JULY 7, 2008
SCALE: N.T.S.

R-13